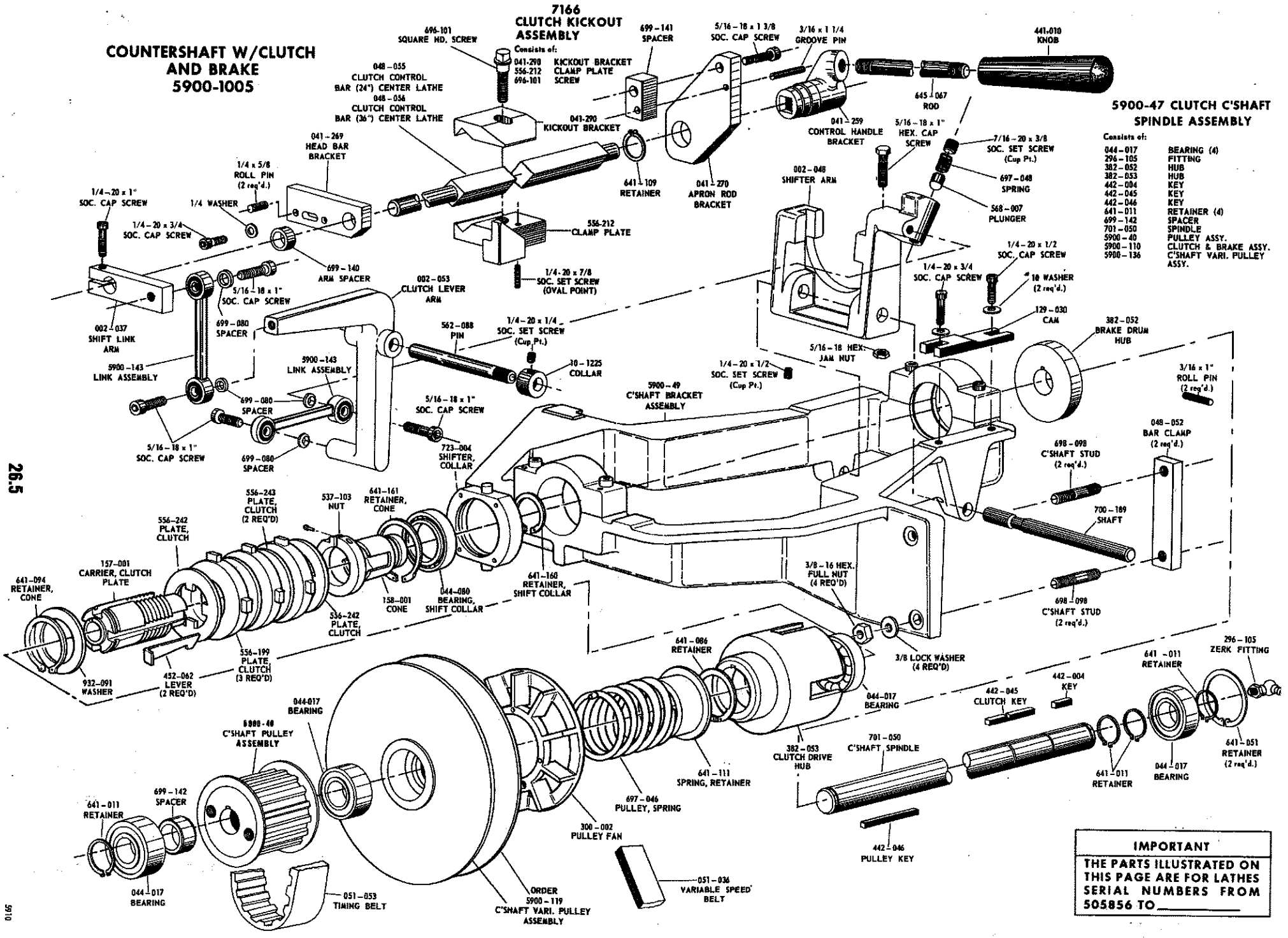


## 5900-47 CLUTCH C'SHAFT SPINDLE ASSEMBLY

Consists of:

| | |
|---|---|
| 044-017 | BEARING (4) |
| 296-105 | FITTING |
| 382-052 | HUB |
| 382-053 | HUB |
| 442-004 | KEY |
| 442-045 | KEY |
| 442-046 | KEY |
| 641-011 | RETAINER (4) |
| 699-142 | SPACER |
| 701-050 | SPINDLE |
| 5900-40 | PULLEY ASSY. |
| 5900-110 | CLUTCH & BRAKE ASSY. |
| 5900-136 | C'SHAFT VARI. PULLEY ASSY. |

**IMPORTANT**

THE PARTS ILLUSTRATED ON THIS PAGE ARE FOR LATHES SERIAL NUMBERS FROM 505856 TO _____