KALAMAZOO BLUEPRINT & SUPPLY CO. 300 4-67

5900-71

PART NUMBER

USED ON	SUB ASSY	REQD	MFD AT
5900			C
5900	72	1	C
6900			C
5900	72	1	C

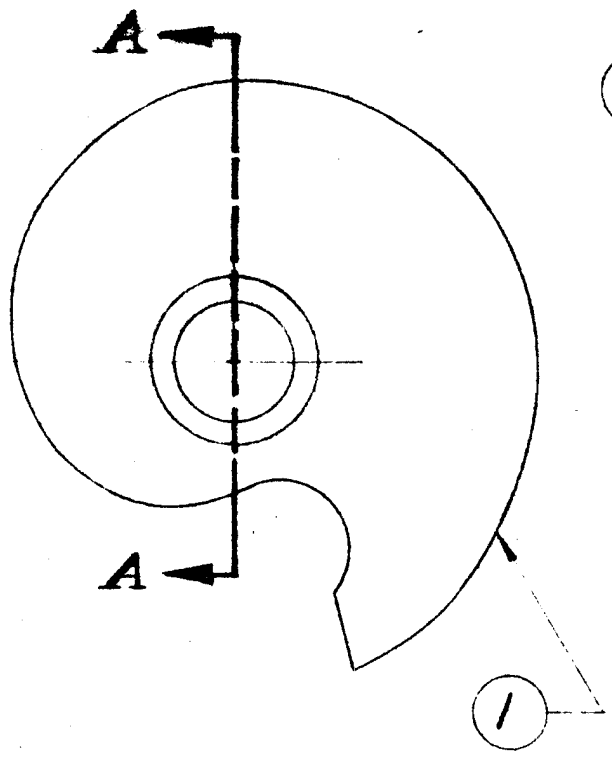

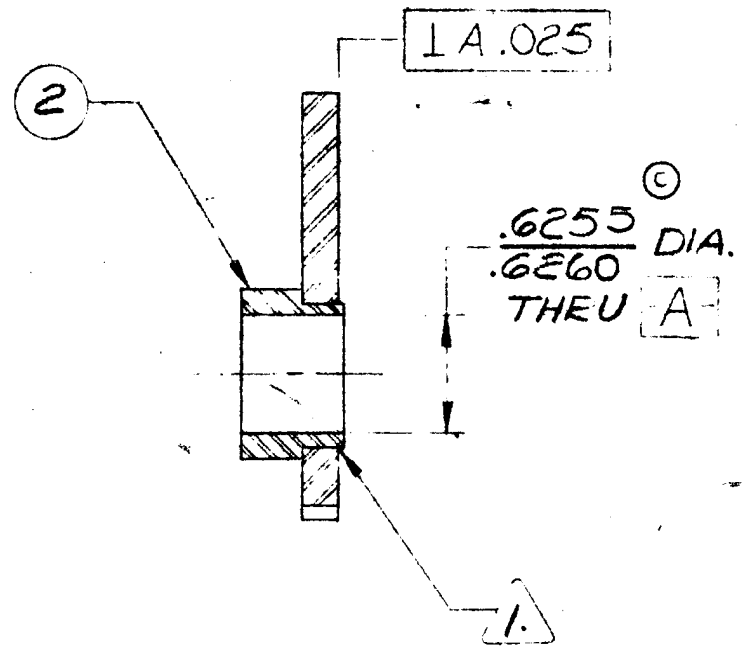

SECTION A-A

FOR INFORMATIONAL PURPOSES ONLY

1. STAKE

NOTES:

SYM.	PART NO.	REQ'D	DESCRIPTION
2	382-067	1	HUB, CAM
1	129-023	1	CAM, VALVE

DATE	SYM	CHANGE RECORD	BY	APPD
1-5-77	C	WAS .6250/.6255	RB	
4-20-70	B	WAS 382-032	JEK	
1-20-68	A	REDRAWN PER NEW DRAFTING STD.	M.L.	

DO NOT SCALE DRAWING
REMOVE BURRS AND SHARP CORNERS
DIMENSION TOLERANCES—UNLESS OTHERWISE SPECIFIED
DECIMAL ± .005
FRACTIONAL ± 1/32
ANGULAR ± 30 MIN
FOUNDRY CASTING ±.005/IN OR 1/32 WHICHEVER IS GREATER
FINISH ALLOWANCE
f1 = 1/32; f2 = 1/16; f3 = 3/32; f4 = 1/8

MATERIAL

HEAT TREATMENT

PROTECTIVE FINISH

PART NAME: VALVE CAM & HUB ASSY.

SCALE: FULL

PART NUMBER: 5900-71

ATLAS PRESS COMPANY
KALAMAZOO, MICHIGAN, U.S.A.

APPD	DATE	DR	DATE
Burch	3-11-68	J.E.K.	12-7-62
		CHKD	DATE
	3-11-68		3-11-68

FOR INFORMATIONAL PURPOSES ONLY

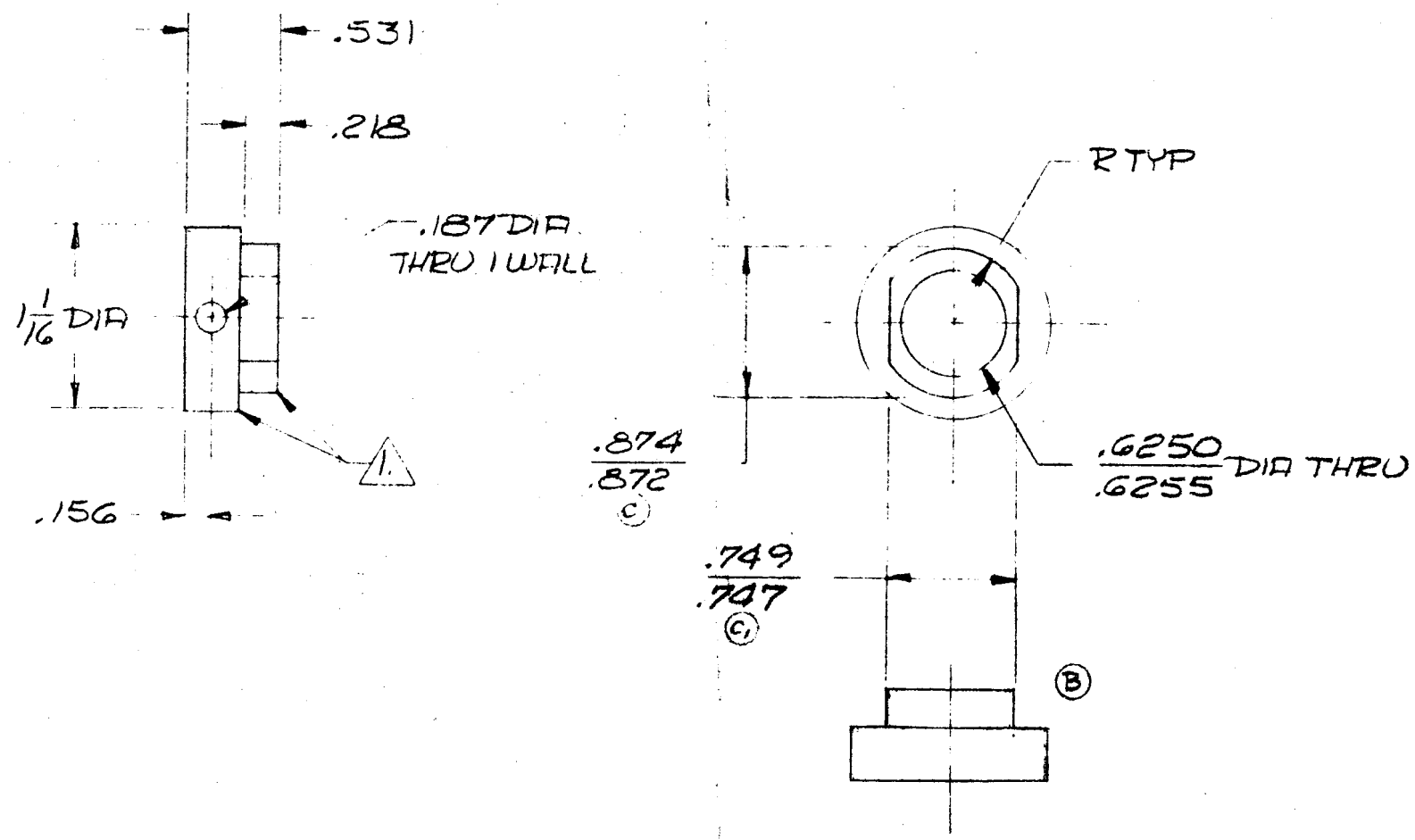

1. SHARP CORNERS REQD

NOTES:

C2

THE REQUIREMENTS OF ENGINEERING STANDARD, ES-1 "STANDARD MACHINING PRACTICES, & TOLERANCES" APPLY TO THIS DRAWING.

PART NUMBER 382-067

USED ON	SUB ASSY	REQD	MFD AT	USED ON	SUB ASSY	REQD	MFD AT
1400			C				
1400	35	1	C				
5900			C				
5900	71	1	C				
6900			C				
5900	71	1	C				
8540			C				
5900	71	1	C				
8550			C				
5900	71	1	C				

DATE	SYM	CHANGE RECORD	BY	APPD
5-29-75	C	WAS .875/.873; C1 WAS .750/.748; C2 ADDED 65-3 NOTE	RW	
5-9-73	B	REMOVED .030 x 30° RELIEFS		
2-13-70	A	BLACK OXIDE REMOVED	SEK	
7-1-69		RELEASED FOR PRODUCTION (XL147601-16)	GUD	

ATLAS PRESS COMPANY
KALAMAZOO, MICHIGAN, U.S.A.

DO NOT SCALE DRAWING
REMOVE BURRS AND SHARP CORNERS
DIMENSION TOLERANCES—UNLESS OTHERWISE SPECIFIED
DECIMAL ± .005
FRACTIONAL ± 1/32
ANGULAR ± 30 MIN
FOUNDRY CASTING ±.005/IN OR 1/32 WHICHEVER IS GREATER
FINISH ALLOWANCE
/1 = 1/32; /2 = 1/16; /3 = 3/32; /4 = 1/8

MATERIAL: LEDLOY 300 OR EQUIV
HEAT TREATMENT:
PROTECTIVE FINISH: A
PART NAME: HUB, CAM
SCALE: FULL
PART NUMBER: 382-067

APPD	Burk	DATE 6-12-69	DR GUD	DATE 6-11-69	
APPD	Johnson	DATE 6-21-69	CHKD SEK	DATE 6-11-69	

KALAMAZOO BLUEPRINT & SUPPLY CO. 1M 2-66

FOR INFORMATIONAL PURPOSES ONLY

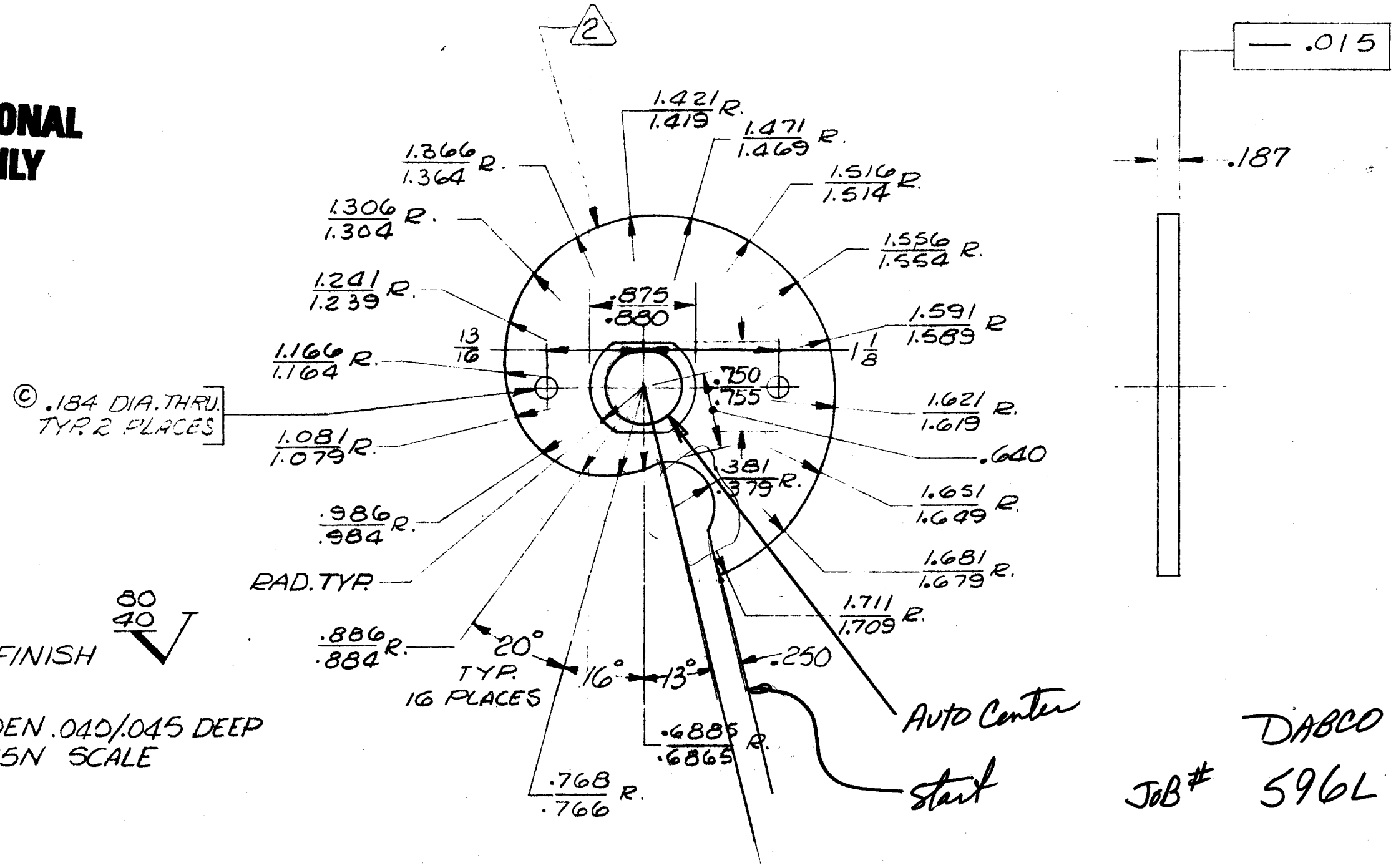

2 SURFACE FINISH 80/40

1 CASE HARDEN .040/.045 DEEP 88/90 15N SCALE

DABCO

JOB# 596L

NOTES:

129-023

PART NUMBER

USED ON	SUB ASSY	REQD	MFD AT	USED ON	SUB ASSY	REQD	MFD AT
5900			C				
5900	71	1	C				
6900			C				
5900	71	1	C				
8540			A				
5900	71	1	C				
8550			A				
5900	71	1	C				

DATE	SYM	CHANGE RECORD	BY	APPD
3-30-73	C	.184 DIA. HOLES ADDED	R.W.	
7-25-68	B	REDRAWN PER NEW DRAFTING STDS		

ATLAS PRESS COMPANY
KALAMAZOO, MICHIGAN, U.S.A.

APPD Bych	DATE 3-11-68	DR J.E.K.	DATE 10-19-61
APPD Chapper	DATE 3-11-68	CHKD RAB	DATE 3-11-68

DO NOT SCALE DRAWING
REMOVE BURRS AND SHARP CORNERS
DIMENSION TOLERANCES - UNLESS OTHERWISE SPECIFIED
DECIMAL ± .005
FRACTIONAL ± 1/32
ANGULAR ± 30 MIN
FOUNDRY CASTING ± .005/IN OR 1/32 WHICHEVER IS GREATER
FINISH ALLOWANCE
f1 = 1/16; f2 = 1/16; f3 = 1/16; f4 = 1/8

MATERIAL: 1010/1020 STEEL

HEAT TREATMENT: 1

PROTECTIVE FINISH:

PART NAME: CAM, VALVE

SCALE: FULL

PART NUMBER: 129-023