ON PART NO.	REQ'D	MFG'D AT
		C
		C
		C
		C
		C
		C
		C

6900-56 ASSEMBLY CONSISTS OF:

PART No.	REQ'D.	DESCRIPTION
044-017	1	BEARING, BALL
131-010	1	CYLINDER, PULLEY
296-048	1	FITTING
563-007	1	PISTON, PULLEY CYLINDER
567-035	1	PACKING
567-037	1	PACKING
567-040	1	PACKING, "O" RING
641-087	2	RETAINER
641-088	1	RETAINER
702-059	1	SLEEVE
932-068	1	WASHER, CYLINDER
932-069	1	WASHER
939-008	1	WASHER

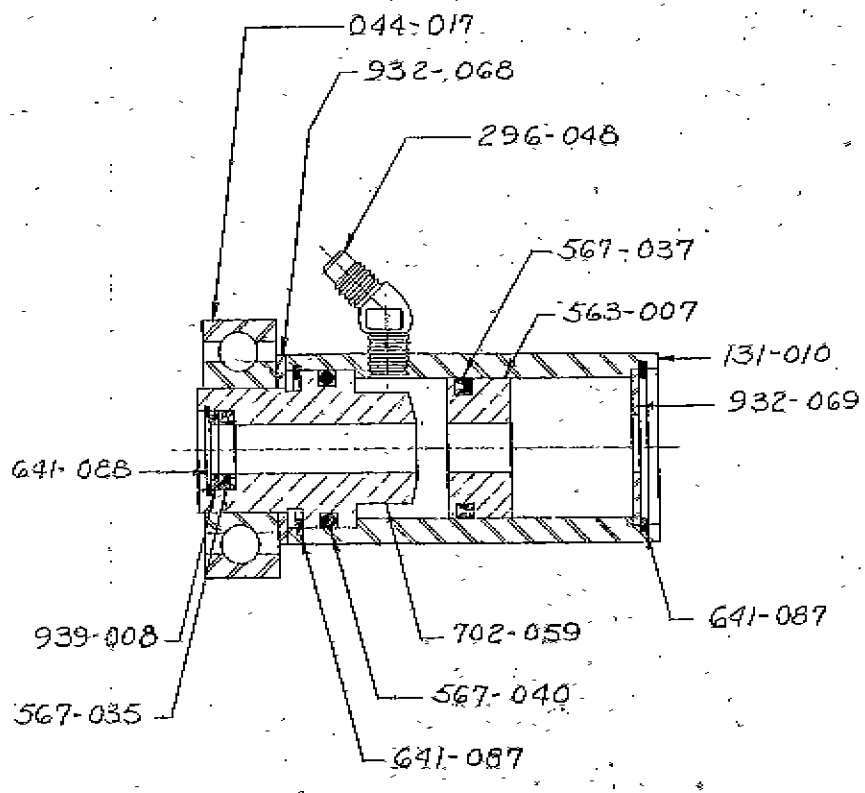

NOTE: THIS ASSEMBLY TO BE WRAPPED IN A PROTECTIVE COVERING TO KEEP OUT FOREIGN MATTER. ALSO, CAP HYDRAULIC FITTING WITH PLASTIC CAP.

ATLAS PRESS COMPANY KALAMAZOO, MICHIGAN, U. S. A.

MATERIAL & HEAT TREATMENT

READ ALL NOTES
FINISHED TOLERANCES UNLESS OTHERWISE SPECIFIED
FRACTIONAL DIM. ± .005
DECIMAL DIM. ± .001
ANGULAR DIM. ± 15 MIN.
FINISH ALLOWANCE
1/8=1/16 1/2=1/8 1/1=1/4 4/1=1/8

PART NAME: PULLEY CYLINDER ASS

DR. BY: JEK DATE: 6-22-64
CH. BY: DATE:
SCALE: FULL

PART NUMBER: 6900-56

PART NUMBER	DATE	SYM.	CHANGE RECORD	DEL. BY	DATE	SYM.	CHANGE RECORD	DR. BY